University of Moratuwa
Faculty of Engineering
Department of Electronic & Telecommunication Engineering

EN1190: Engineering Design Project
Team AuraPLus
Smart Sense Plug

Index No	Name
230180F	Fernando H.M.D
230261F	Induwara M.L.A.S.
230521E	Ranasinghe D.P.H.
230536E	Rasanjana W.P.G.R.A.

Abstract

This report presents the development of **Smart Sense Plug**, an intelligent motion-sensing add-on designed to improve the safety and energy efficiency of household appliances, particularly irons. The system automatically cuts off power when an appliance remains idle for a user-defined period, helping prevent accidents and unnecessary power consumption. The solution includes a motion-detecting unit attached to the appliance and a smart plug unit that manages power delivery based on real-time data transmitted wirelessly.

1. Introduction

1.1 Arriving at a Problem

The initial phase involved identifying everyday challenges encountered by members of our group, particularly focusing on safety concerns related to common household appliances. These problems were systematically categorized into distinct sections:

- By Area of Life: This categorization focuses on concerns related to daily household activities—specifically the use of electrical appliances such as irons—that impact a broad demographic, ensuring the problem is relevant to a wide population.
- By Urgency: The problem was evaluated based on its immediacy, prioritizing the safety risks associated with appliances like irons being accidentally left switched on, which could potentially lead to fires or energy wastage. This made the issue one of high urgency.
- By Complexity: We assessed the feasibility of implementing a solution within a three-month timeframe. The problem was found to be technically approachable using existing components such as motion sensors, microcontrollers, and relay circuits.
- By Frequency: The frequency of occurrence was high, as many people occasionally forget to switch off their irons after use, making this a common and relatable issue with significant safety implications.
- By Resource Requirements: The resources necessary to address this problem—such as electronic components, 3D-printed enclosures, and programming—were considered moderate and feasible within the scope of the project duration and budget.
- By Type of Solution Required: The problem required a technical solution involving real-time motion detection, wireless communication, and automated power control. The aim was to create a simple, cost-effective, and retrofittable system without needing to replace the appliance itself.

1.2 Arriving at a Solution

Following the categorization of identified problems, we applied a systematic evaluation to determine which solutions were most applicable to the identified criteria. We then re-categorized the potential solutions and selected those that satisfied the majority of the identified cases:

By Approach: Mitigative Solutions were prioritized for their ability to reduce the severity or impact of the problem. Our solution focuses on mitigating the risks associated with accidentally leaving an iron switched on, thereby enhancing household safety.

By Scope: Incremental Solutions were selected for their ability to be implemented gradually without the need for large-scale changes or costly infrastructure. The Smart Sense Plug allows users to enhance safety for a single appliance without requiring an entire home automation system.

By Resource Requirements: We focused on Moderate Resource Solutions that necessitate a reasonable investment of time, money, and effort. The proposed system uses readily available components, such as microcontrollers, sensors, and 3D printing, making the project feasible within the limitations of time and budget.

By Complexity: Simple Solutions were favored for their ease of implementation, usability, and comprehension. The Smart Sense Plug is designed to be user-friendly, with intuitive operation and minimal setup, ensuring accessibility for non-technical users.

By Innovation: Hybrid Solutions were chosen for their ability to combine conventional and innovative elements. Our solution merges traditional plug-based appliances with smart motion detection and wireless communication, creating an adaptable and forward-thinking safety enhancement.

1.3 Motivation

The aim is to bring accessible smart safety features to everyday appliances, enhancing both safety and energy efficiency without requiring expensive replacements.

1.4 Justification for Selection

When it comes to existing solutions, smart home systems are becoming increasingly popular, offering users the ability to control appliances remotely through internet-connected devices. However, these systems often require expensive infrastructure upgrades or the purchase of entirely new “smart” appliances.

Unlike a fully integrated smart home system, the Smart Sense Plug provides laser-focused control specifically designed to enhance the safety of everyday appliances—particularly those like irons that pose a fire hazard if left unattended. This solution allows users to add smart functionality to their existing appliances without the need for costly replacements or complex setups.

The Smart Sense Plug stands out as a highly affordable and accessible alternative, enabling users to automate specific appliances on a case-by-case basis. This selective approach gives users greater flexibility and customization compared to traditional, pre-defined smart home ecosystems, making advanced safety features achievable for a broader audience without significant financial investment.

2. Product Architecture

2.0 Overview

The architecture of the **Smart Sense Plug** is designed to enable automated power control, real-time motion monitoring, and enhanced safety for connected appliances. The system consists of two main hardware components that work together seamlessly to detect inactivity and take action accordingly. Here's a breakdown of the key components and how they interact:

2.1 Iron Unit (Motion Unit)

2.1.1 Sensors and monitoring:

The Ion Unit is equipped with an MPU-6050 sensor module, which combines an accelerometer and gyroscope in a single compact chip. This sensor continuously monitors acceleration and tilt in three axes (X, Y, Z), capturing the real-time motion of the appliance to which it is attached. The data collected is crucial for determining whether the appliance is actively in use or idle.

2.1.3 Microcontroller:

The **ESP32-S3 MINI** microcontroller serves as the central processing unit in the Iron Unit.

In the Ion Unit, the ESP32 handles sensor data collection, and transmits the data to the Power unit at discrete time intervals.

2.1.4 Power Supply:

The Ion Unit is powered by a rechargeable Lithium-Polymer battery capable of lasting approximately 10 hours on a full charge. This design ensures complete portability and appliance independence, as no external power source is required for the sensor module.

A charging port is integrated into the Iron Unit, and when battery levels are critically low, the Plug Unit signals this via a blinking orange light.

2.1.5 Communication protocol:

The system uses ESP-NOW, an efficient and low-latency communication protocol native to the ESP32 microcontroller. This allows for one-way wireless communication from the Ion Unit to the Plug Unit without the need for external Wi-Fi or internet access.

ESP-NOW ensures fast transmission with minimal power consumption, making it ideal for battery-operated devices like the Ion Unit.

2.1.6 Printed Circuit Board

The **PCB design of the Ion Unit** was carefully optimized to create a **compact, lightweight, and efficient layout** that could be seamlessly integrated onto an appliance without adding bulk or interfering with usability. Given the size constraints of portable devices, the PCB was meticulously designed to accommodate all essential components within a minimal footprint.

To achieve this, we utilized **Surface-Mount Device (SMD)** components wherever possible, allowing for greater component density and a sleeker form factor. The key features of the Ion Unit PCB include:

- The **ESP32 S3 MINI microcontroller**, responsible for data processing and wireless communication.
- **MPU-6050 accelerometer and gyroscope sensor** for motion detection.
- Essential **passive components** such as resistors and capacitors, along with a **voltage regulator** to ensure stable power delivery from the Lithium-Polymer battery.

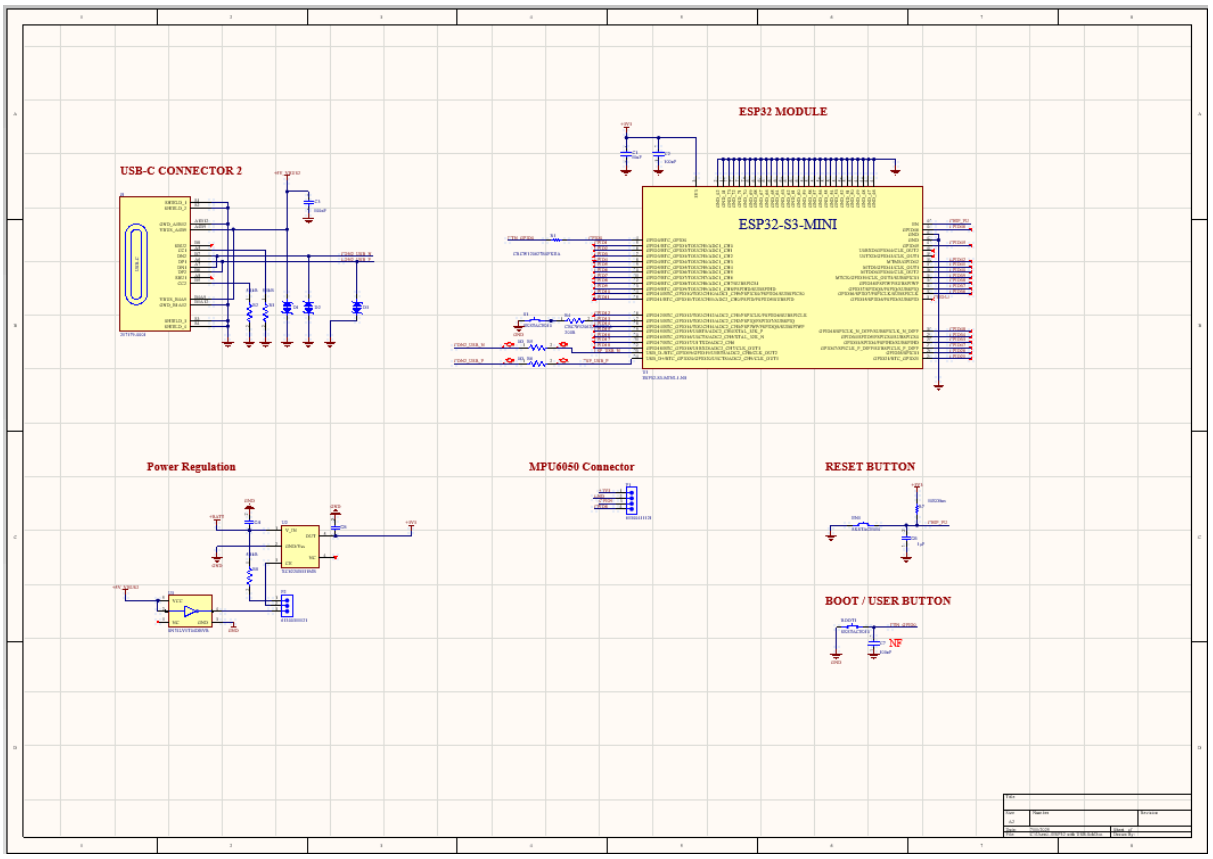

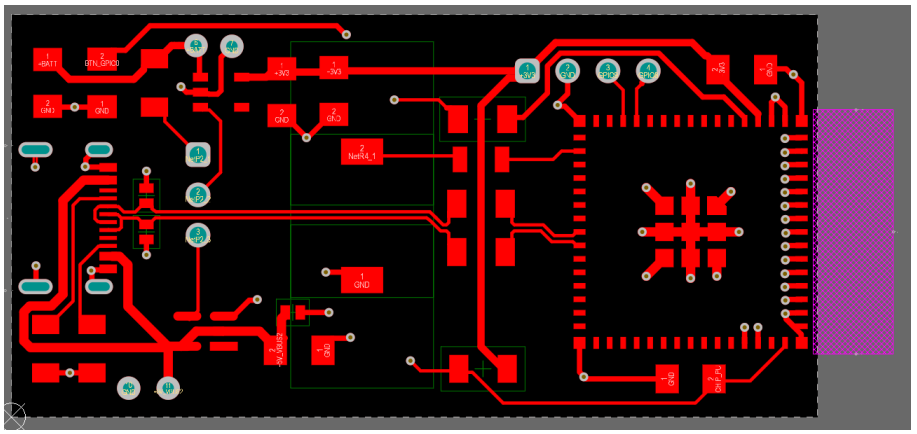

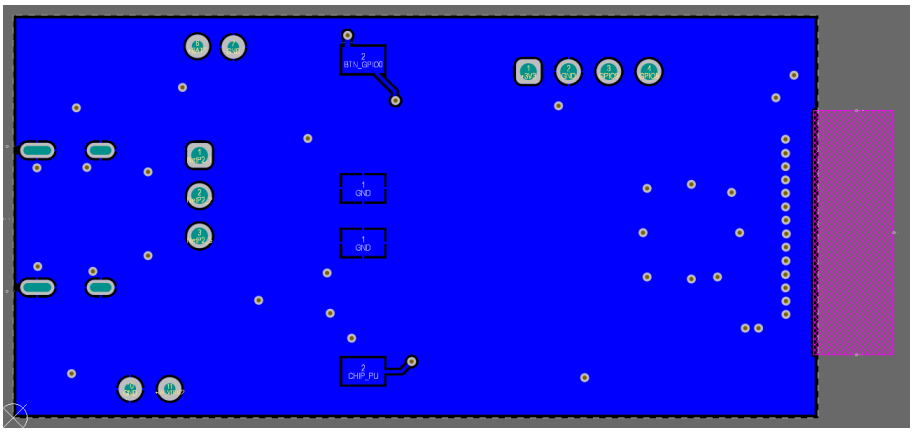

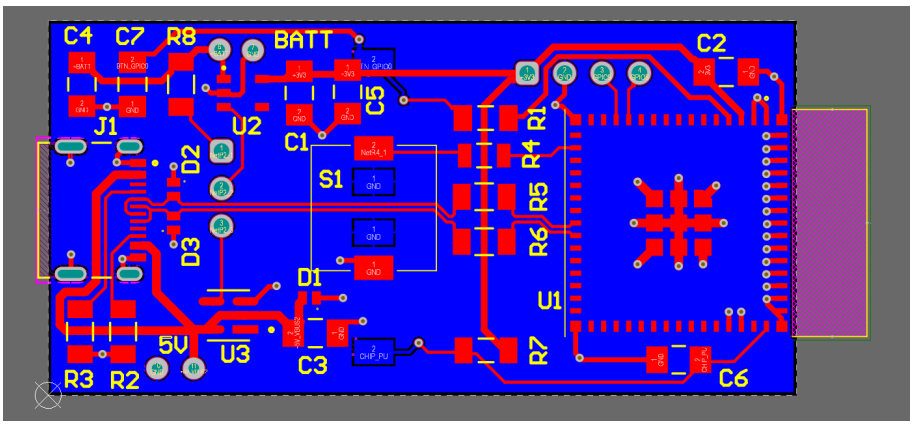

2.1.6 Printed Circuit Board

When designing the enclosure for the Ion Unit, our primary focus was to create a housing that is compact, lightweight, easy to install, and user-friendly. Since the Ion Unit is intended to be attached directly to an appliance—such as the handle of an iron—its design is needed to ensure safe operation, easy attachment, and durability without compromising on comfort or functionality.
To meet these goals, the enclosure was carefully shaped to allow secure strapping onto the iron's handle while maintaining sufficient clearance from any heated surfaces. The internal layout features separate mounting areas for the PCB, battery, and sensor module, effectively modularizing the design. This modular approach not

only simplifies assembly but also makes it easily serviceable and replaceable in case of component failure.
For the material, we selected PLA plastic for 3D printing the prototype. PLA offers good electrical insulation properties and moderate heat resistance, making it suitable for initial testing and demonstration purposes. While PLA meets the needs of the prototype phase, we recognize the importance of enhanced heat resistance for commercial production. Future mass manufacturing would benefit from the use of injection-molded, heat-resistant polymers to improve durability and safety without significantly increasing cost.
The enclosure also incorporates a charging port access, ensuring that the Lithium-Polymer battery can be recharged without disassembling the unit. Additionally, provisions were made to securely hold the MPU-6050 sensor in place to ensure accurate motion detection. The design ensures that the entire Ion Unit remains lightweight, unobtrusive, and visually discreet, aligning with the goal of making it an effortless safety upgrade for household appliances.

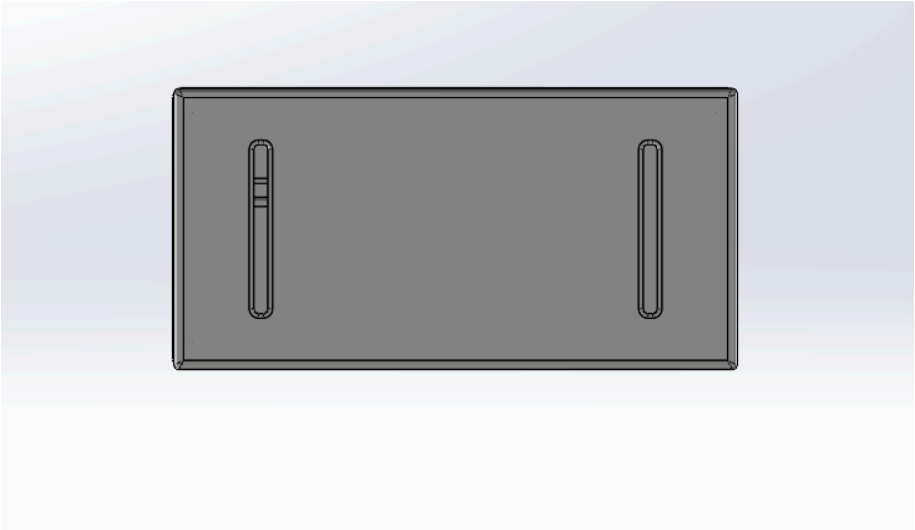

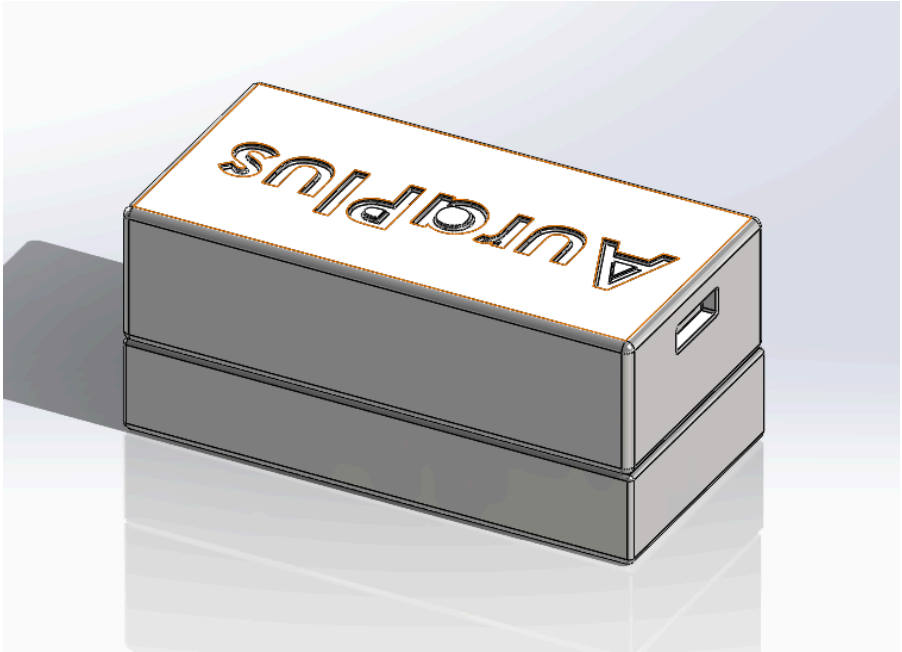
AuraPlus

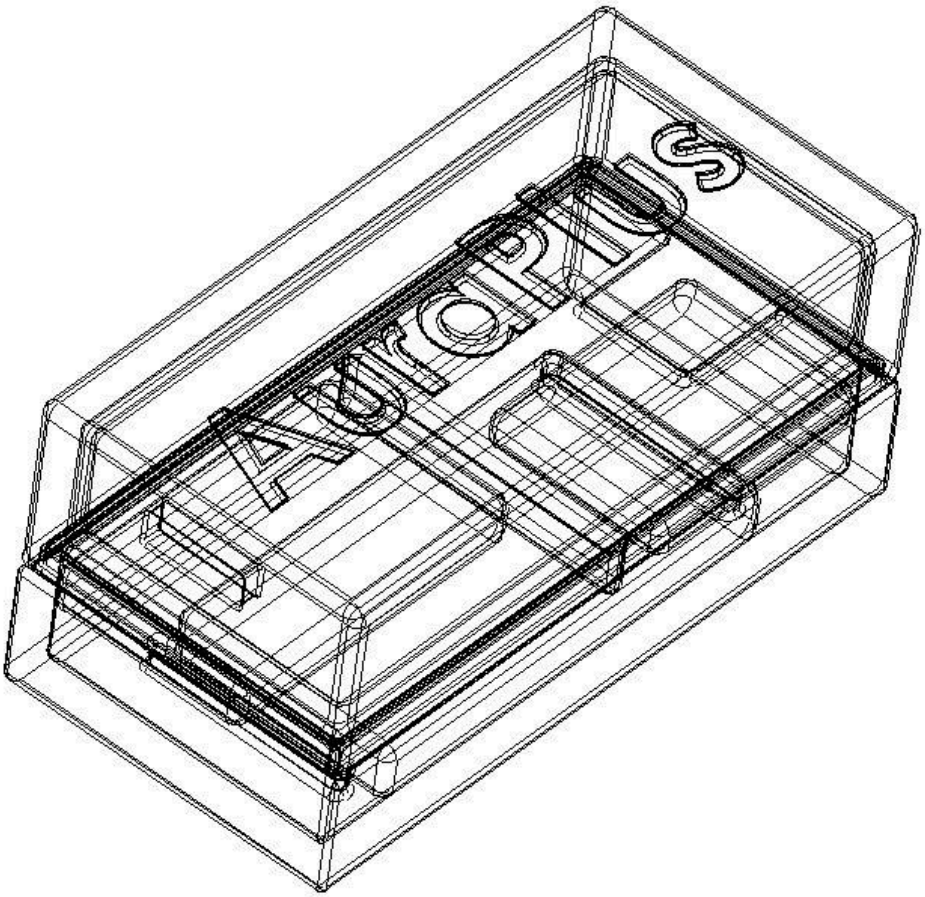
AuraPlus

2.2 Plug Unit (Power Control Unit)

The **Plug Unit** serves as the **Power Control Unit** in the **Smart Sense Plug** system. It is responsible for receiving motion data from the Iron Unit, processing this information, and controlling the power supply to the connected appliance based on real-time activity. The design emphasizes **safety, user-friendliness, and cost-effectiveness**.

2.2.1 Microcontroller

The Plug Unit uses an **ESP32-S3 MINIr**, which acts as the central processor. It handles all major functions including:

- Analyzing incoming motion data.
- Calculating inactivity timeouts.
- Controlling the relay switch.
- Managing user inputs from the rotary encoder.

The choice of the ESP32-S3 ensures fast processing, low power consumption, and seamless wireless communication.

2.2.2 Motion Detection

The Plug Unit continuously receives motion status updates from the Ion Unit. Based on this data:

- If motion is detected ➔ Power remains ON.
- If no motion is detected ➔ A countdown based on the selected timeout begins.
- If motion remains absent after the set period ➔ Power is cut by triggering the relay.

This system ensures that appliances are only powered when actively in use, significantly enhancing safety.

2.2.3 Relay Control

A **relay module** embedded within the Plug Unit physically switches the power on or off to the appliance:

- The relay is **electronically controlled** by the ESP32-S3.
- It provides robust isolation between the high-voltage appliance circuit and the low-voltage control circuit.

- Power is cut automatically based on the inactivity timer or can be manually overridden.

2.2.4 RGB Indicator

The Plug Unit features a **multicolor RGB LED indicator** that visually communicates the system's current state to the user. The color coding is intuitive and easy to understand:

- 🟢 **Green:** Appliance ON with motion detected.
- 🔵 **Blue:** Appliance ON but idle (motion not detected; timer running).
- ⚪ **White:** Power cut-off after idle time (relay OFF).
- 🟠 **Blinking Orange:** Searching for Ion Unit or Ion Unit battery low.
- 🔴 **Red:** Manual Override Active (system bypassed).

This visual feedback allows users to quickly assess the system's status without needing a display or complex controls.

2.2.5 User Interface

The Plug Unit is equipped with a **rotary encoder with printed time intervals**:

- Rotating the dial allows users to select the preferred idle timeout duration (1, 5, 10, 15, 20, 25, 30 minutes).
- Pressing and holding the rotary encoder for **5 seconds** activates **Manual Override Mode**.
- In Manual Override Mode, the plug functions as a regular power plug with no motion-based control.

The design ensures that the interface is **simple, intuitive, and accessible to all users**, regardless of their technical background.

2.2.6 PCB Design

The **Plug Unit** of the **Smart Sense Plug** incorporates a **modular PCB design**, consisting of three distinct Printed Circuit Boards (PCBs). This separation of functional blocks improves reliability, simplifies manufacturing, and allows for easier maintenance or future upgrades.

2.2.6.1 User Indicators PCB

The **User Indicators PCB** is a small dedicated board housing the **RGB LED system** and the **rotary encoder**.

- Positioned at the front of the enclosure for easy visibility and access.
- Manages the visual status indications (Green, Blue, White, Blinking Orange, Red).
- Captures rotary adjustments for idle time selection and push-button input for manual override activation.

This PCB focuses on providing a clear and simple **user interface**.

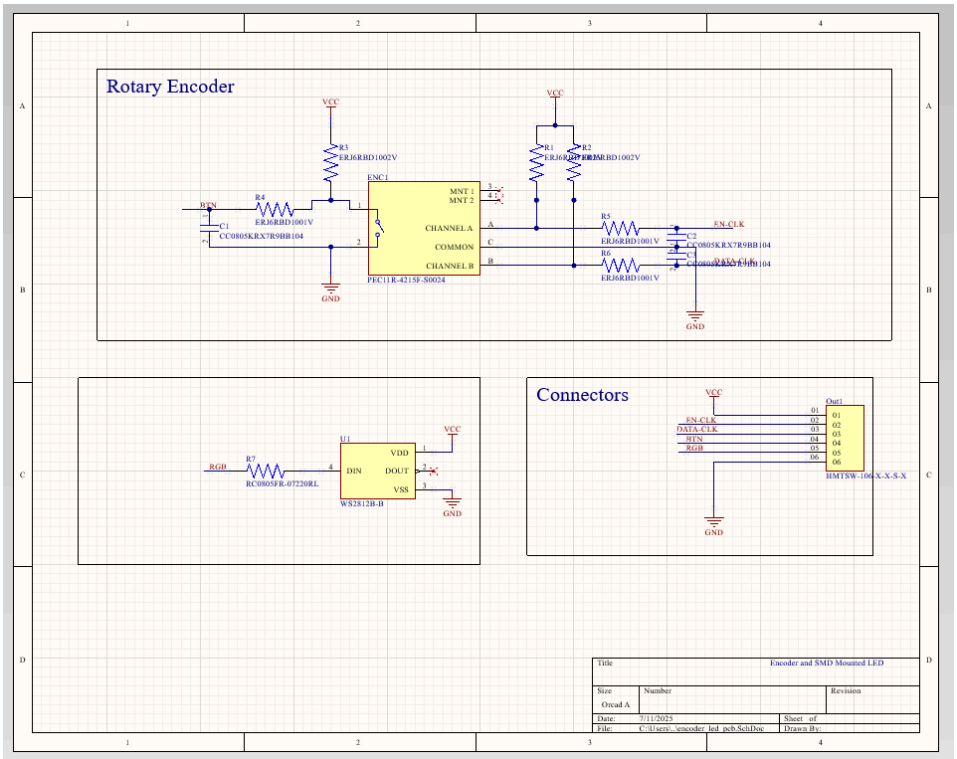

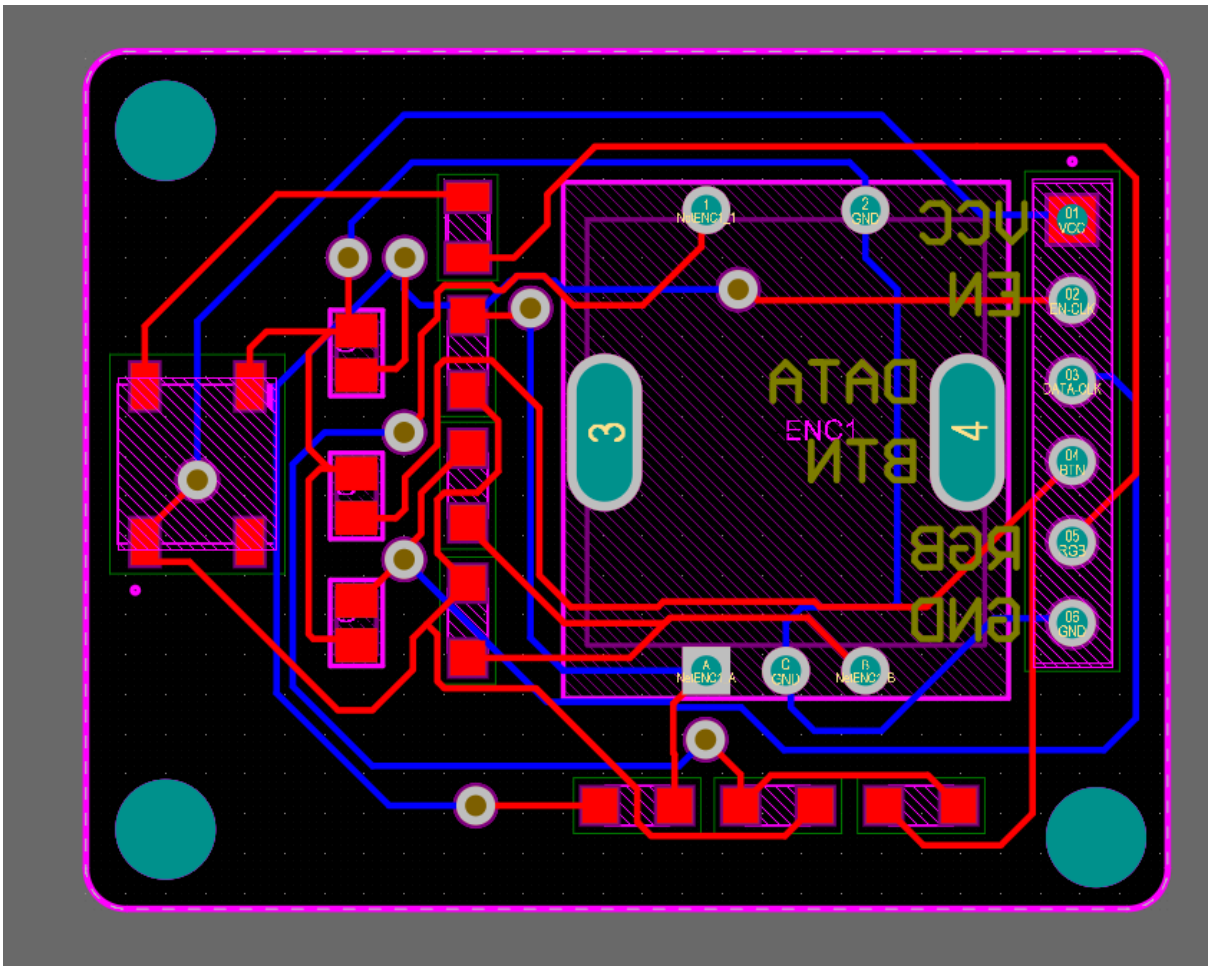
1
NRENC1_1
2
GND
01
VCC
02
EN-CLK
03
STA-CLK
04
BTN
05
RGB
06
GND
3
4
ENC1
A
NRENC1_A
C
GND
B
NRENC1_B

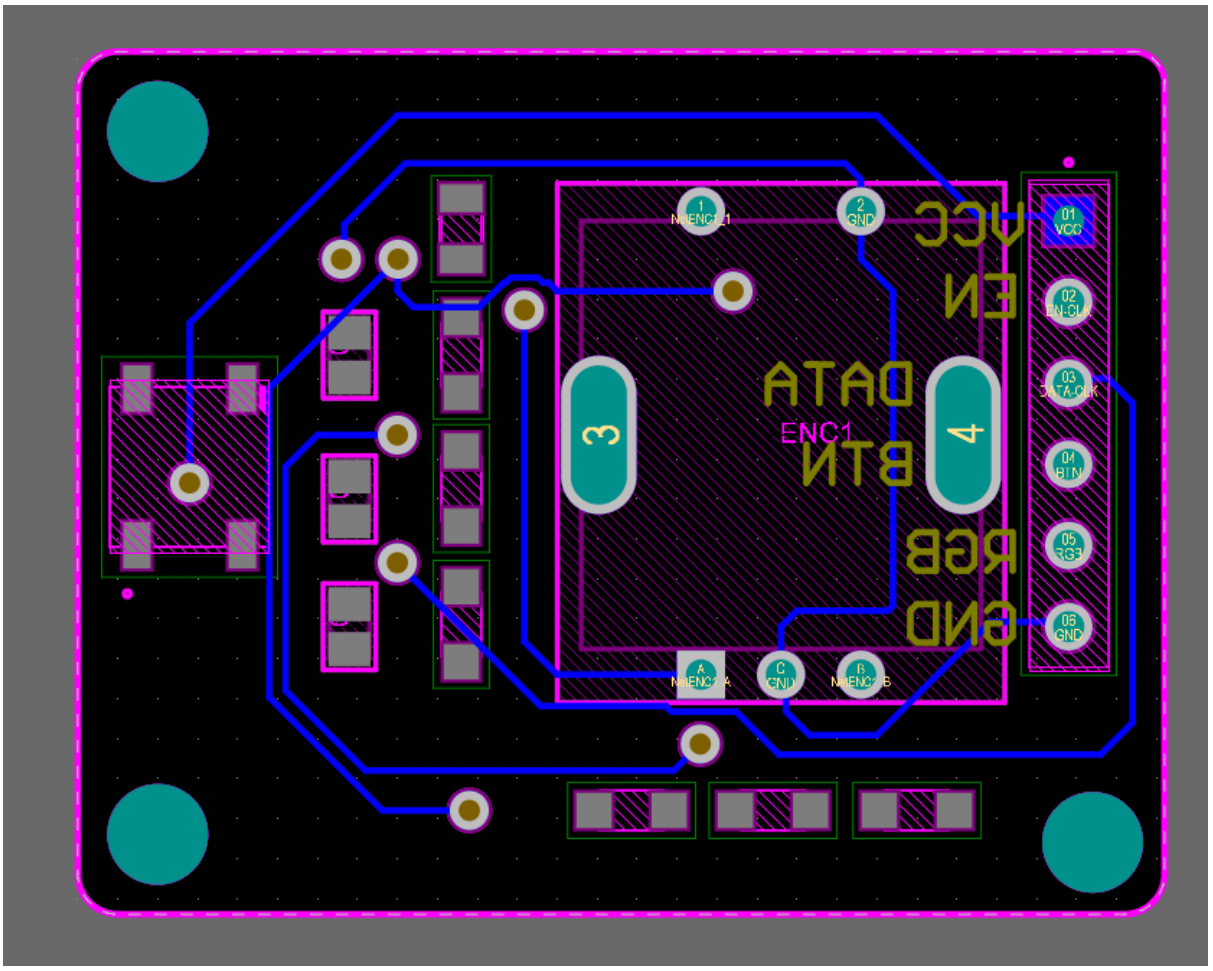
1
NRENC1_1
2
GND
01
VCC
02
EN-CLK
03
STA-CLK
04
BTN
05
RGB
06
GND
3
4
ENC1
A
NRENC1_A
C
GND
B
NRENC1_B

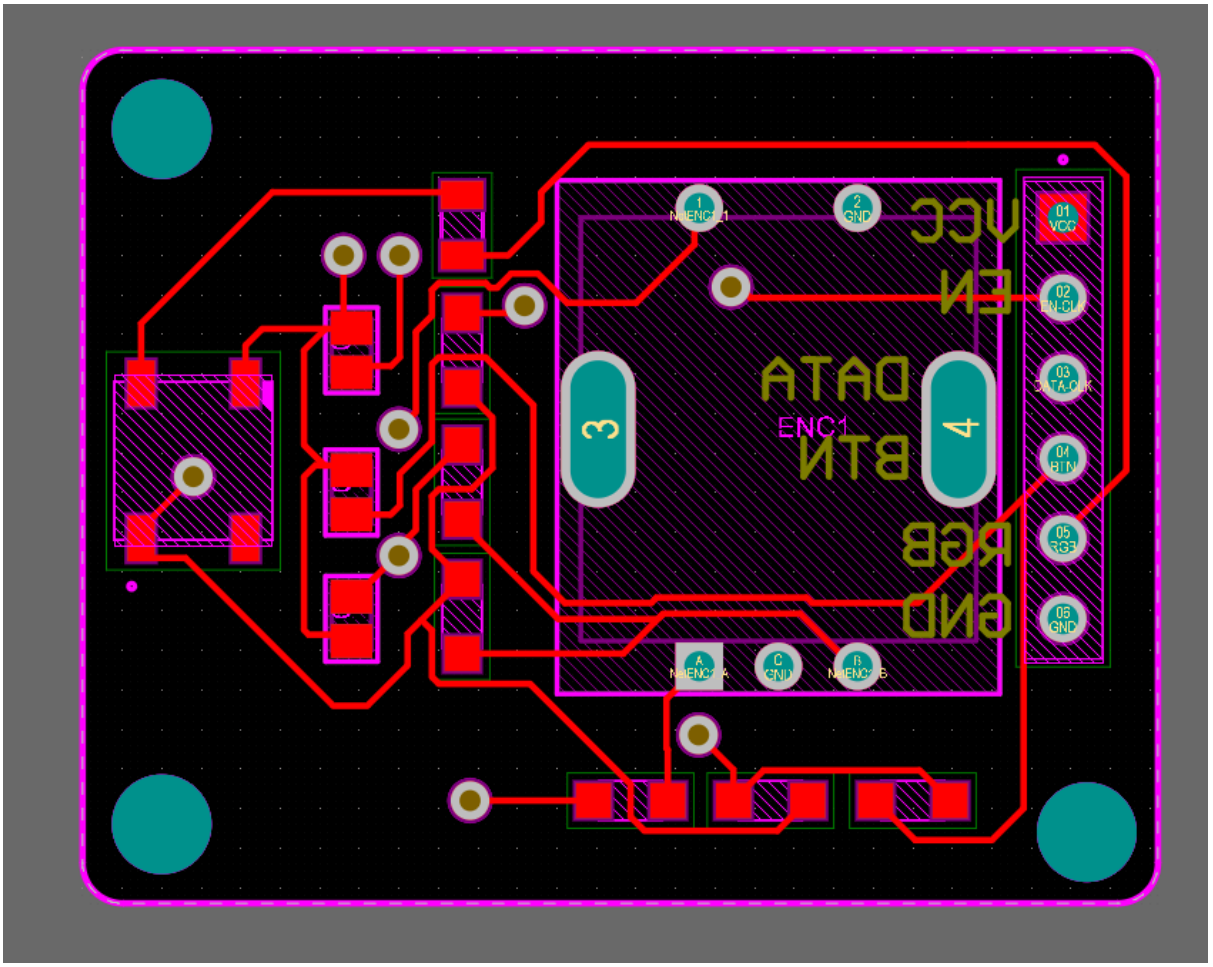
ENC1
1
2
GND
VCC
EN
DATA
BTN
RGB
GND
3
4
01
VCC
02
03
04
BTN
05
RGB
06
GND
A
C
GND
B

2.2.6.2 Power PCB

The **Power PCB** is the heart of the **high-voltage handling** section of the Plug Unit. It performs two critical functions:

- **Relay Switching:**
  It houses the **relay module** that physically switches the **230V AC supply** to the appliance ON or OFF, based on control signals from the Microcontroller PCB. This ensures automated and manual control over the connected device's power flow.

- **AC-DC Power Conversion:**
  The Power PCB also integrates the **AC-to-DC conversion circuitry**, stepping down the **230V AC mains voltage to 5V DC** to safely power the **Microcontroller PCB (ESP32-S3)** and associated low-voltage components. This eliminates the need for any external power adapters or converters.

This board is essential for **safe, efficient, and reliable power delivery and control** within the Smart Sense Plug system.

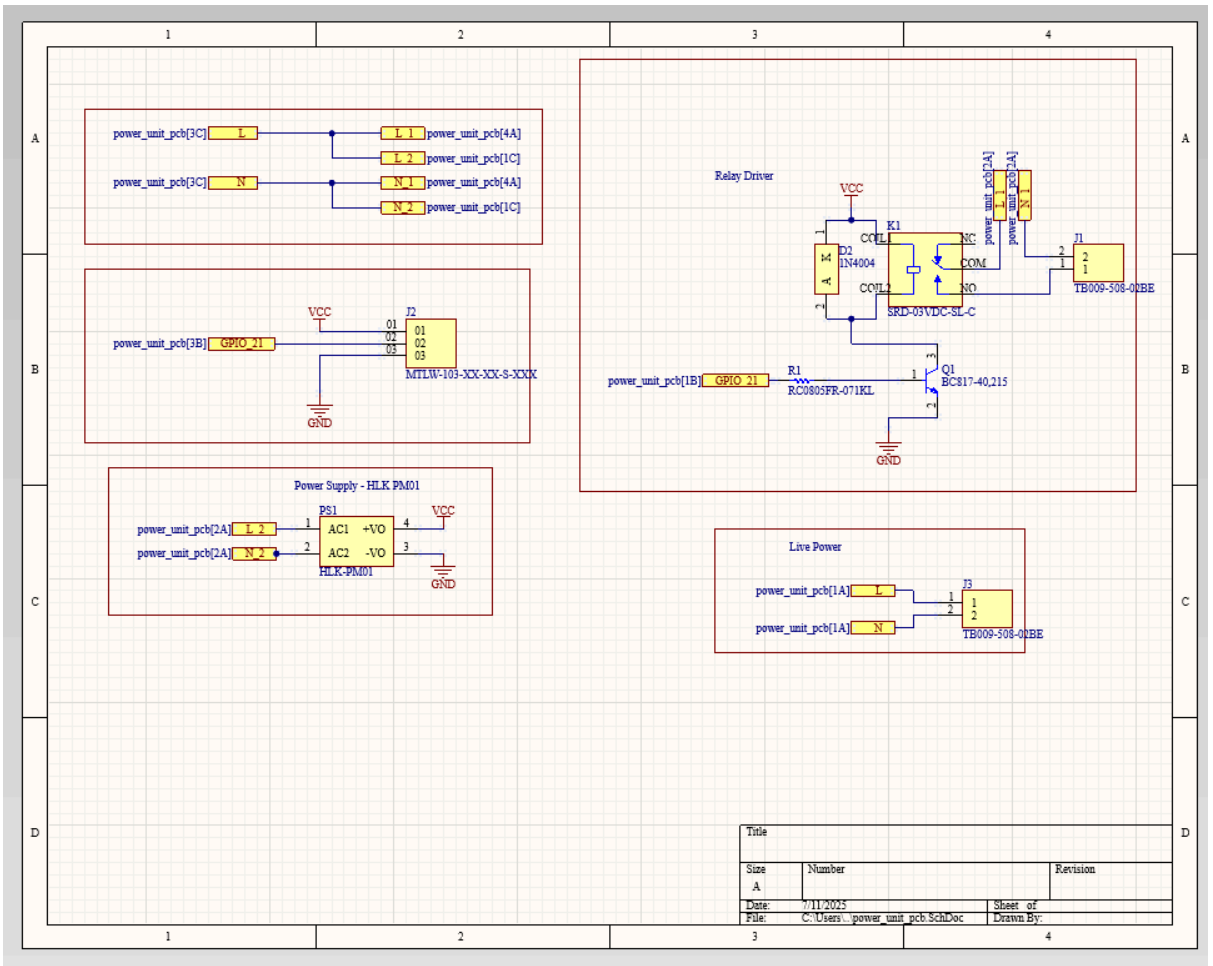

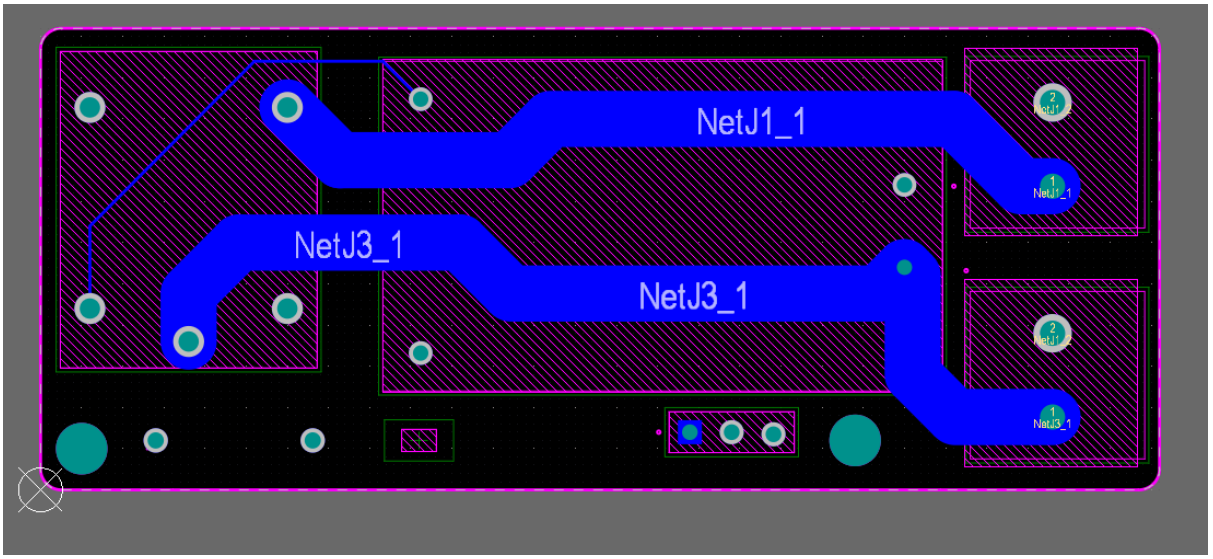
NetJ1_1
NetJ3_1
NetJ3_1

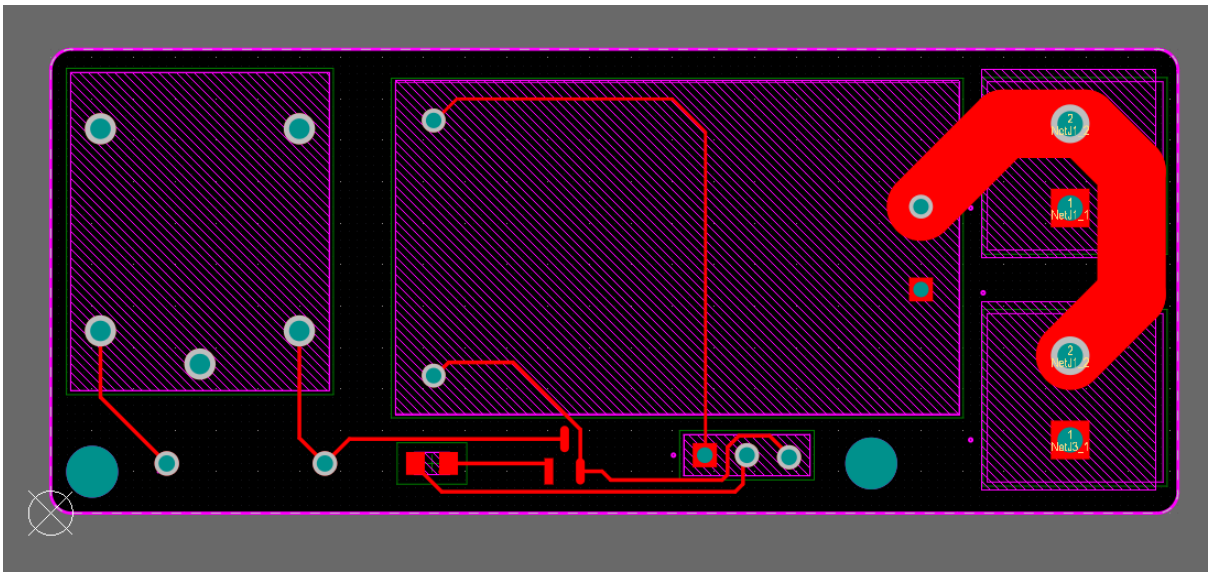

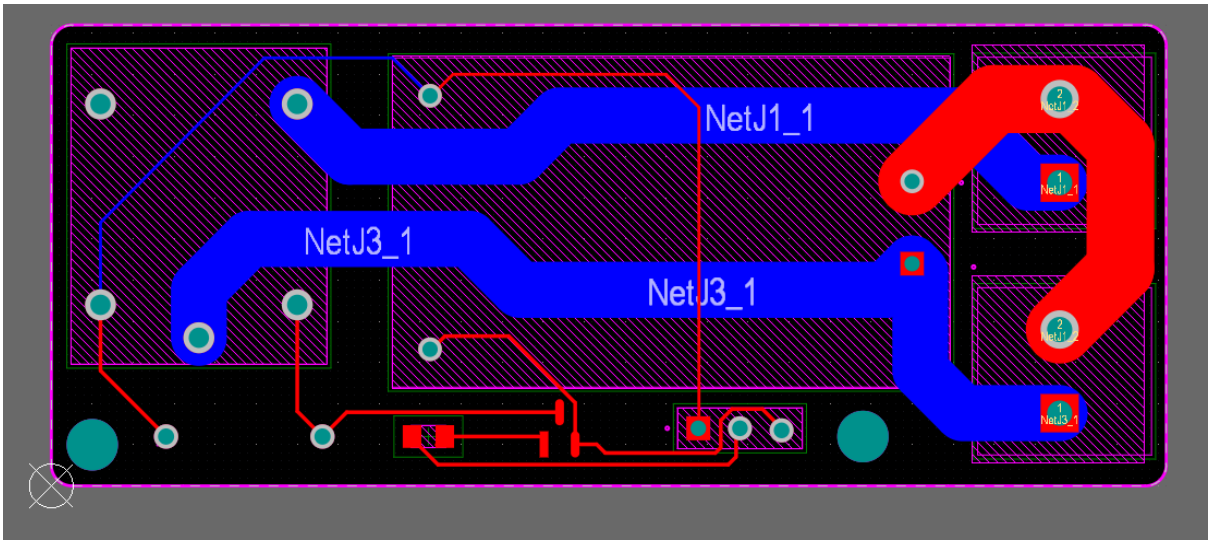
NetJ1_1
NetJ3_1
NetJ3_1

2.2.6.3 Microcontroller (MCU) PCB

The **MCU PCB** houses the **ESP32-S3 microcontroller** along with essential electronic components:

- Voltage regulation circuitry.
- Passive components (resistors, capacitors).
- Communication pathways for receiving motion data and controlling the relay, indicators, and encoder.

By isolating the **processing logic** on a dedicated board, this design ensures **better signal integrity**, **thermal isolation**, and **simpler fault diagnosis**.

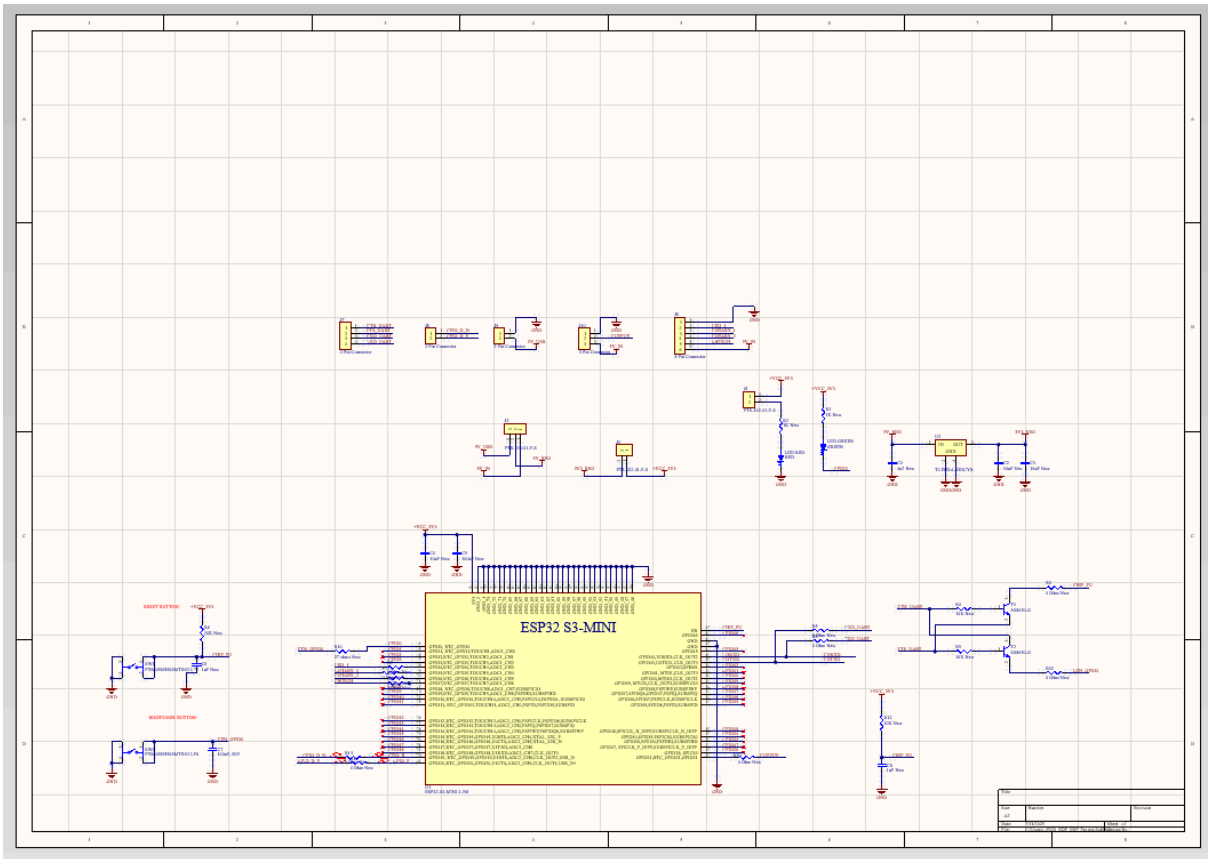

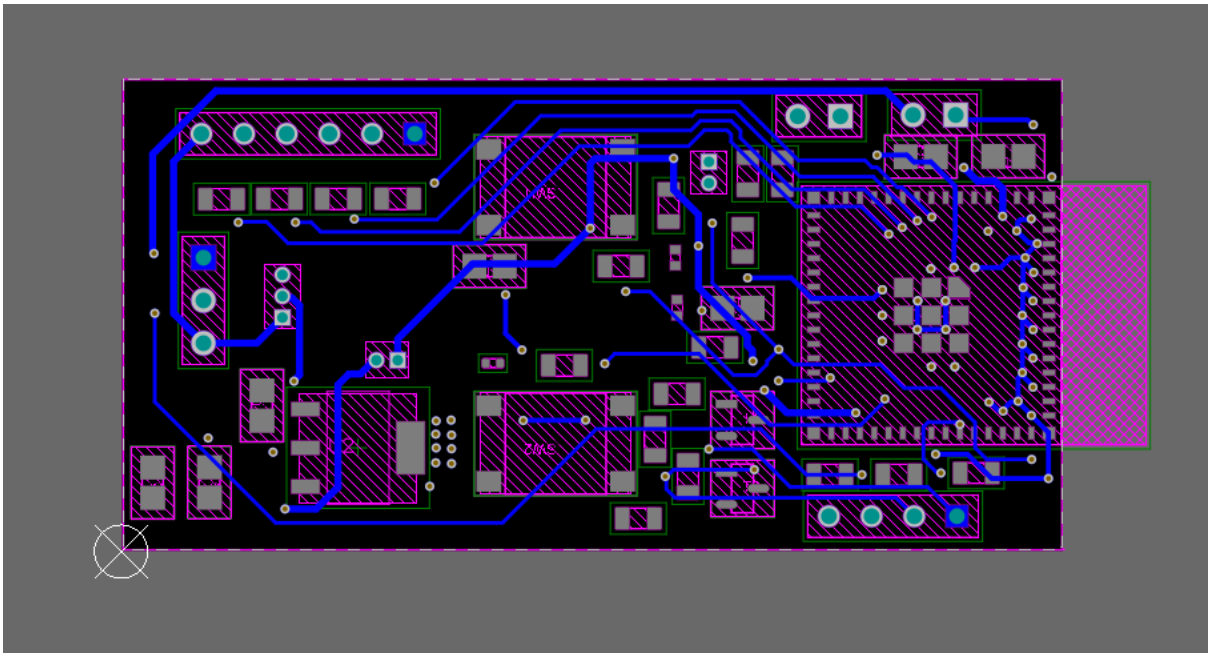
U2
2ME

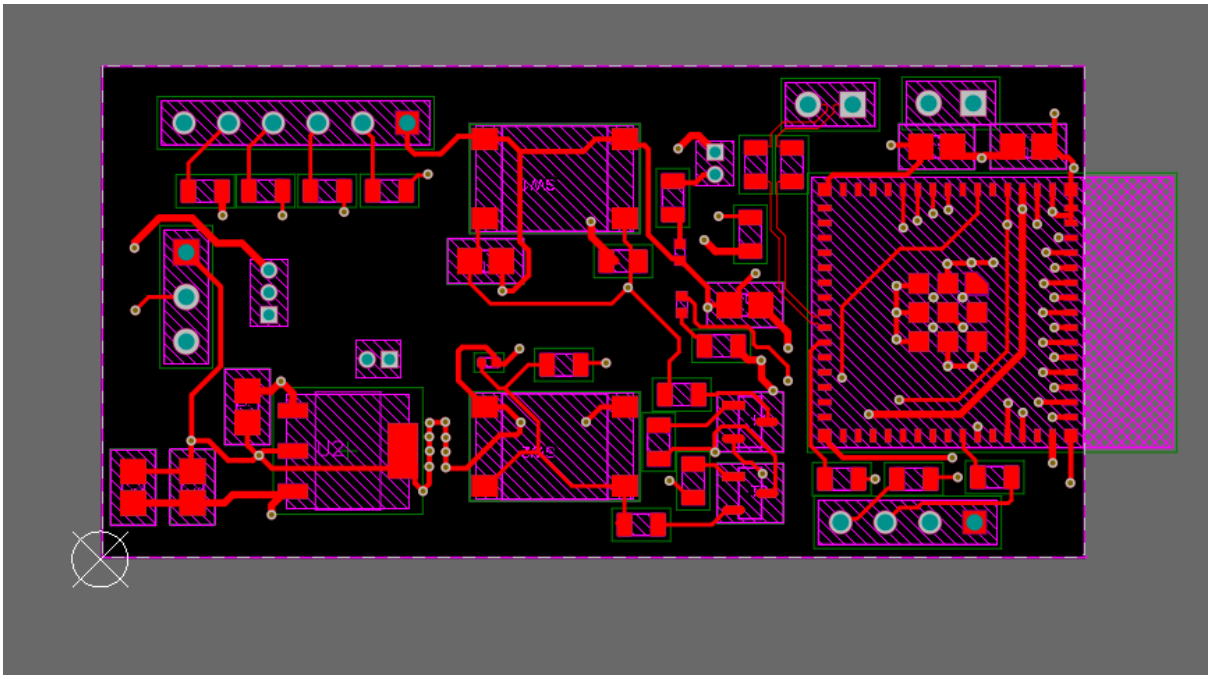
U2
2ME

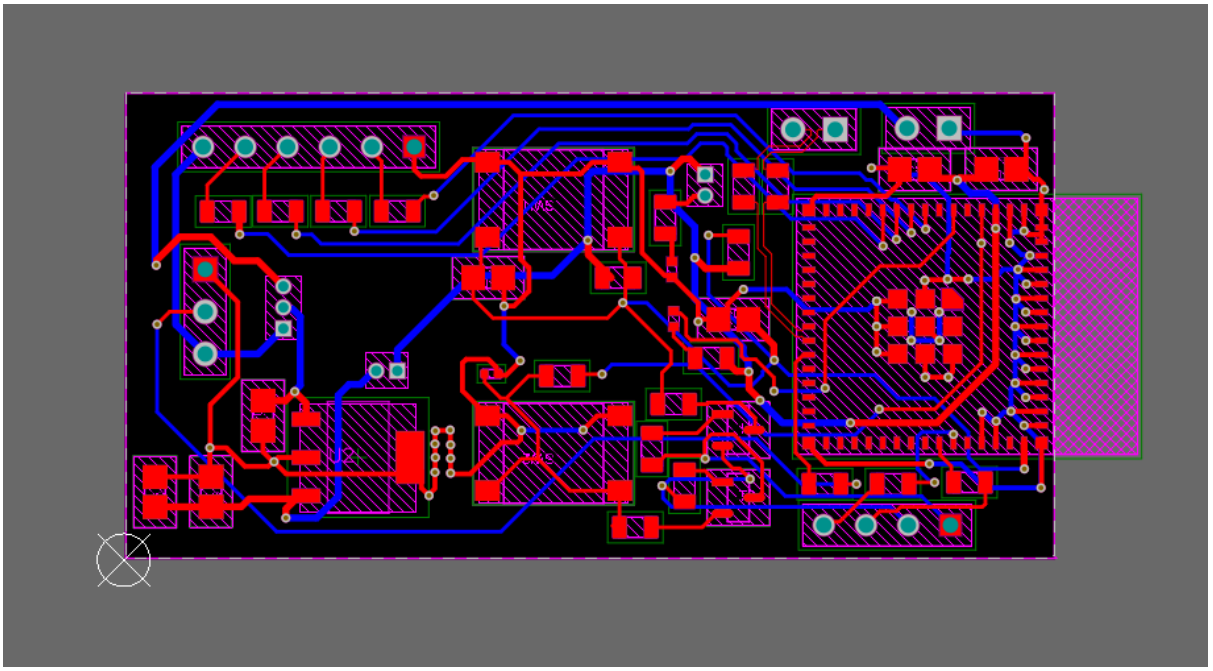

2.2.7 Enclosure Designs

Both the **Plug Unit** and **Ion Unit** feature **compact, custom-designed 3D-printed enclosures** that ensure **safety, usability, and durability** while maintaining a sleek appearance suitable for everyday home use.

To meet different functional requirements, we used a combination of **PETG, PLA+, and TPU** materials:

- **PETG** was selected for its **heat resistance** and **mechanical strength**, ideal for parts exposed to higher temperatures or stress.
- **PLA+** was used for structural sections where **rigidity and electrical insulation** are important, particularly in the Plug Unit.
- **TPU** was utilized for sections requiring **flexibility or impact resistance**, adding to overall durability.

The **Ion Unit enclosure** is designed to be **small and lightweight**, allowing it to be **safely strapped to the appliance handle**, well away from any heating surfaces. Its compact size ensures it does not interfere with the appliance's normal use.

The **Plug Unit enclosure** is shaped to resemble a **standard multi-plug** and includes:

- A dedicated **user interface area** for the **rotary encoder** and **RGB indicator**, designed with an **intuitive, UX-focused layout**.
- Internal compartments that securely hold the three modular PCBs: **User Indicators PCB, Power PCB, and MCU PCB**.
- Space for safe routing of **AC wiring** and integration of the **fuse** for overcurrent protection.

Both enclosures were designed for **easy assembly, modularity, and user-friendly installation**, while keeping manufacturing costs low for prototyping. In future versions, **injection molding with high-grade materials** will replace 3D printing for enhanced safety and durability.

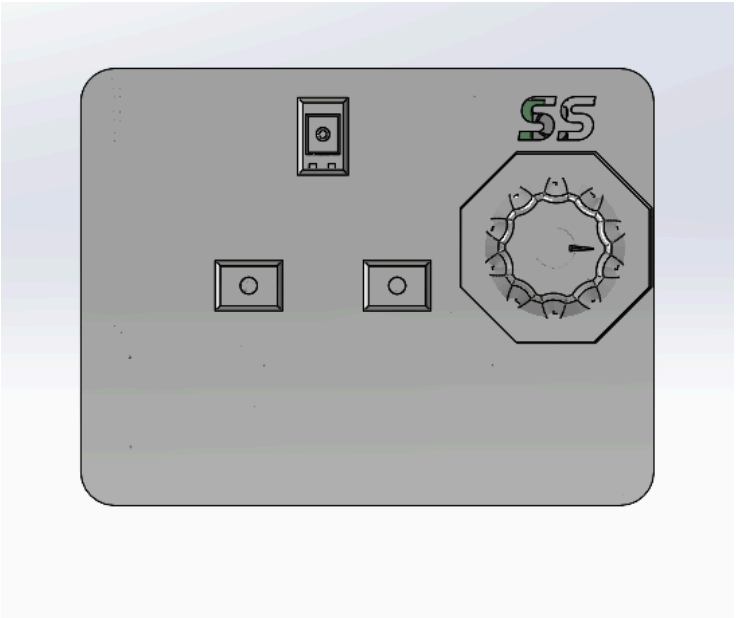
SS

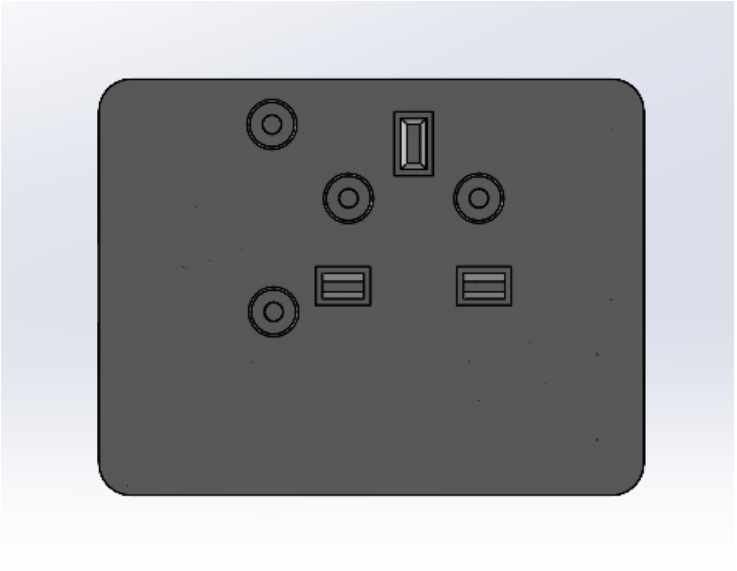

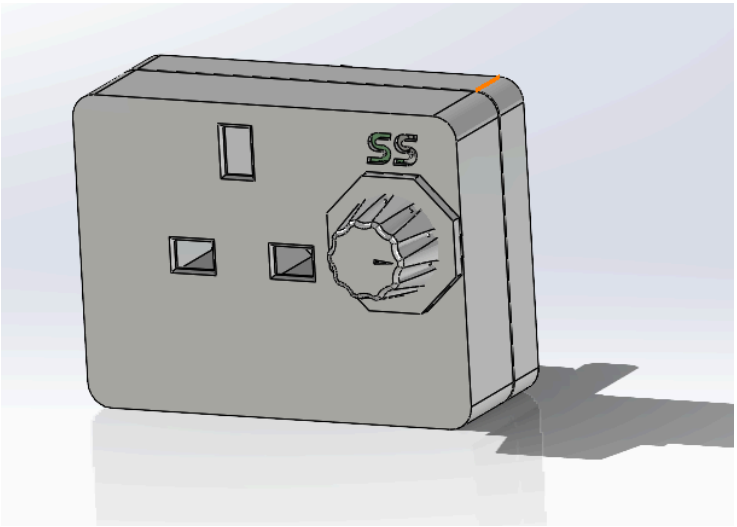
SS

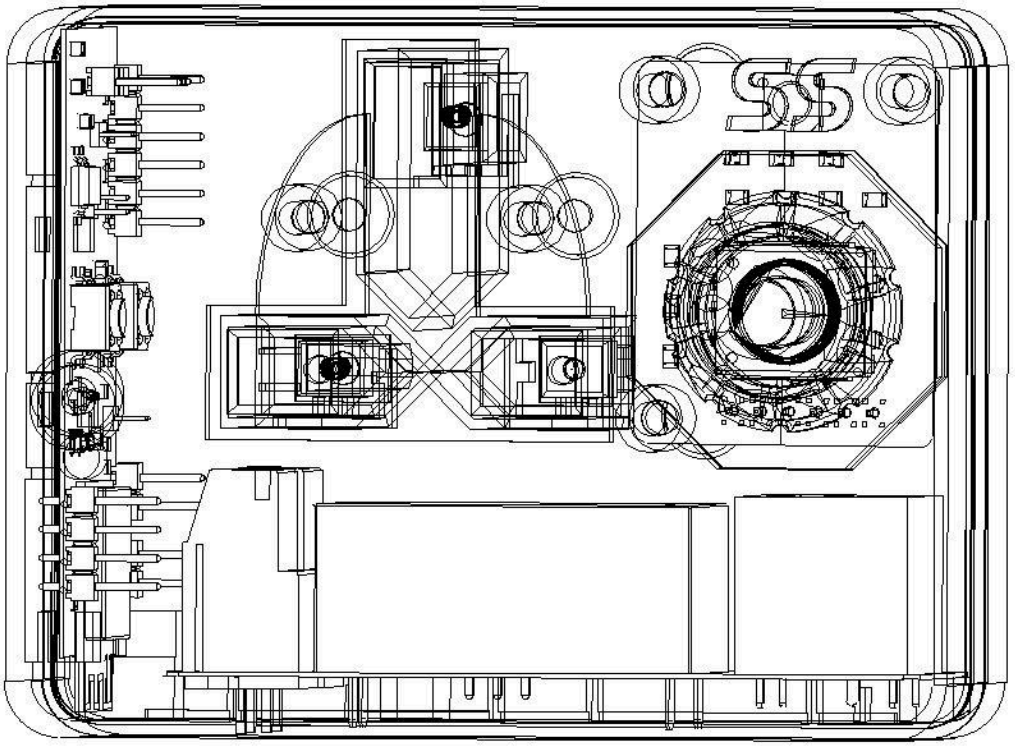

2.2.8 Firmware Architecture

- The firmware for the **Smart Sense Motion Detected Plug** is structured around **FreeRTOS**, enabling highly responsive, multi-threaded control. It separates core functionalities into independent **tasks**, allowing for real-time communication, motion analysis, device control, and user feedback. The **communication layer** is built using **ESP-NOW**, which facilitates fast, peer-to-peer packet delivery between the motion unit (transmitter) and the plug (receiver).

- The firmware stack is broken into the following layers:

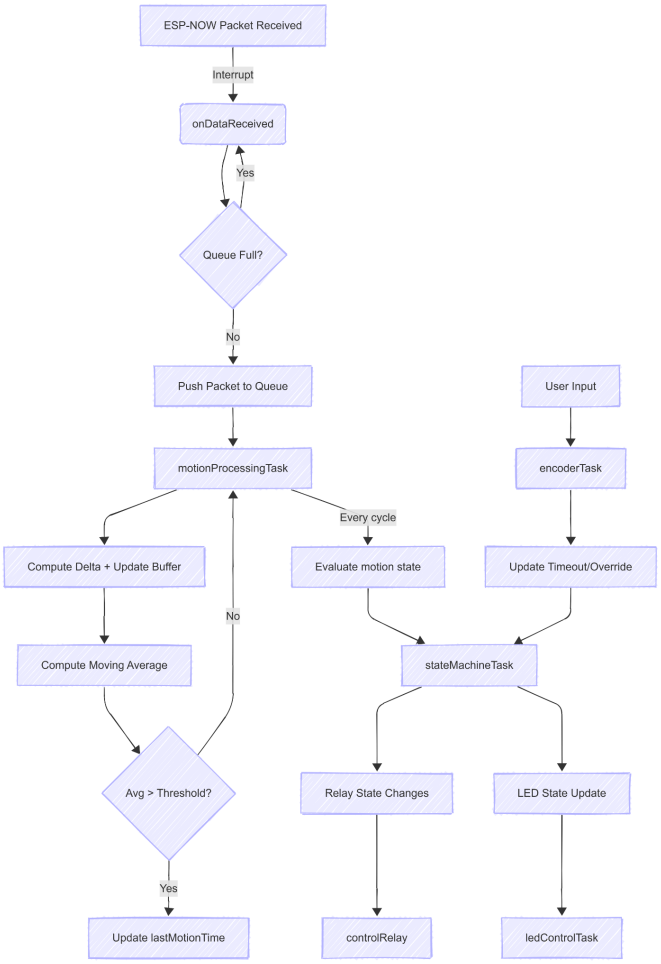

2.2.9 Communication

- Uses ESP-NOW for fast, reliable one-directional communication from the Iron Unit to the Plug Unit.

3. Final Product

3.1 Product Overview

The Smart Sense Plug monitors appliance motion, calculates idle time, and automatically manages power with clear visual feedback. A manual override is available as a .

3.2 Key Features and Specifications

- Automatic motion-based power cut-off.
- Manual override to work as a standard plug.
- Adjustable idle timer (1, 5, 10, 15, 20, 25, 30 minutes).
- Continuous motion monitoring with real-time alerts.

3.3 Design and Aesthetics

- Clean, minimal white PETG, PLA+, TPU casing.
- Use a simple, intuitive design for the timeout dial for clear indications.
- Used a compact and smaller design for the

3.4 Engineering Insights

- Motion detection is based on calculating acceleration derivatives and comparing them with a threshold from experimental data.
- Continuous data transmission ensures real-time responsiveness.

3.5 User Experience

- Simple push button + rotary-based user control.
  - Based on a rotary encoder

- An RGB light maintains the states of the device.
- This is a plug and play device, so this device doesn't interfere with the iron

3.6 Quality Assurance

- Tested for motion detection accuracy, communication reliability, battery endurance, and safety.

4. Marketing, Sales, and After-Sale Service

4.1 Market Analysis

Targeted primarily at home users seeking affordable, simple safety and energy-saving solutions for appliances like irons.

4.2 Positioning

Marketed as a **smart home safety gadget** for everyday users.

4.3 Pricing

Prototype cost: Approximately Rs. 7894. Mass production could significantly lower costs.

4.4 Distribution

Sales via online platforms and home appliance retailers.

4.5 Marketing Plan

- Social media campaigns focused on safety, convenience, and energy savings.

- Targeted ads for homeowners and families.

4.6 After-Sale Service

- 6-month warranty.
- Support through online and phone channels.

5. Task Allocation

5.1 Iron Unit

- PCB Design: Heshan Ranasinghe / Sasith Induwara
- Software Development: Sasith Induwara
- Enclosure Design: Heshan Ranasinghe
- Documentation: Minaya Fernando

5.2 Plug Unit

- PCB Design: Minaya Fernando / Rusiru Anupama
- Software Development: Rusiru Anupama
- Enclosure Design: Minaya Fernando
- Documentation: Minaya Fernando

6. Budget

Component	Quantity	Cost (USD)	Total (USD)	Cost (Rs.)
ESP32	2	1.70	3.4	1003
MPU-6050	1	0.40	0.4	118
Rotary Encoder-PEC11R	1	0.34	0.34	100.3
SMD5050 RGB Light	1	0.08	0.08	23.6
Push Buttons	4	0.03	0.12	35.4
AC-DC Power Modules	1	1.70	1.7	501.5
3.3V VDO ICs	2	0.20	0.4	118
3V Relay	1	0.32	0.32	94.4
Capacitors and Resistors	1	2.00	2.0	590
PCB Cost	-	-	8.0	2360
Enclosure	-	-	10.0	2950
Total			**26.34**	**7894.2**

---

7. Future Developments

- Use a Triac instead of a relay unit

- AI-based motion pattern learning.
- Using low-power MCUs for the design.
- Focusing on power optimizations in the Iron Unit for more battery life
- Low battery indication for Iron Unit

- Expansion to other appliances (e.g. Water).